0711-S Series

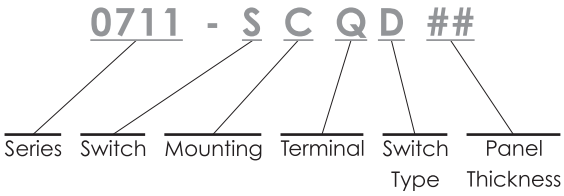

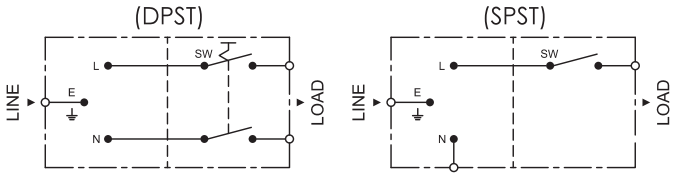

Specification	Inlet	Rocker Switch
Power Rating	10A 250V AC Europe 15A 250V AC North America	6A 250V AC Europe 12A 125V AC North America
Electric Strength	AC 2,000V for 1 Minute	AC 1,500V for 1 Minute
Contact Resistance	30MΩ Max.	20MΩ Max.
Insulation Resistance	100MΩ Min. at 500V DC	100MΩ Min. at 500V DC
Operating Temperature	+80°C	+ 85°C (Europe) + 125°C (North America)
Materials	Thermoplastic UL Flammability 94V-0 & Copper Alloy	Thermoplastic UL Flammability 94V-0 & Copper Alloy
Mounting	C : Screw-on P : Snap-in	Double Pole (On /Off Switch) Single Pole (On / Off Switch)
Terminal	Q : Q.D / Solder Tab, 4.8 X 0.8 S : Solder Tab, 3.5 X 0.8 P : PCB Pin	Solder Tab, 4.7 X 0.8
Panel Thickness	Snap-in Panel Thickness : 1.0 / 1.2 / 1.5	
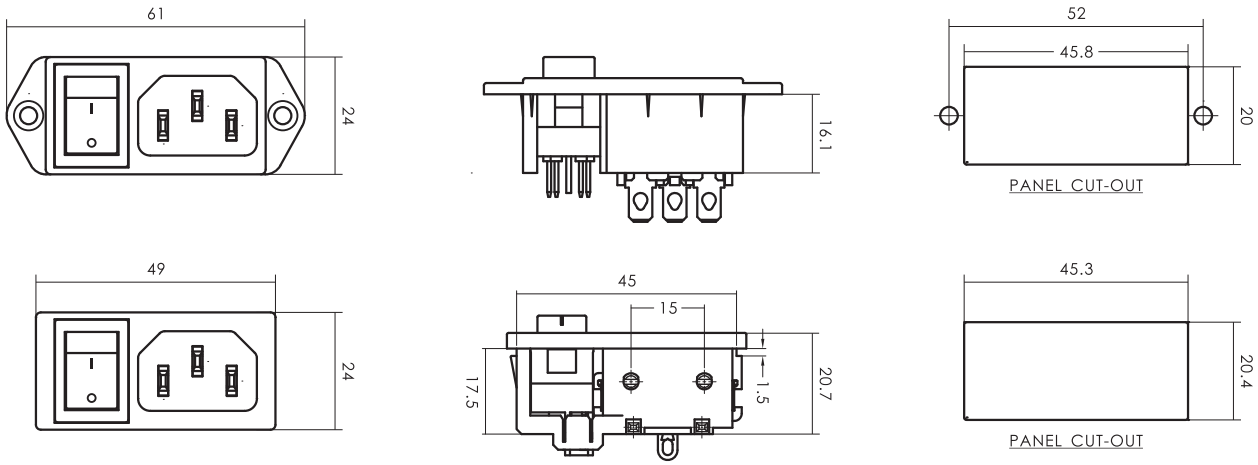
Unit : mm